Air Lift 1000™

Kits 60728, 60777, 60811, 60820

Multiple Applications

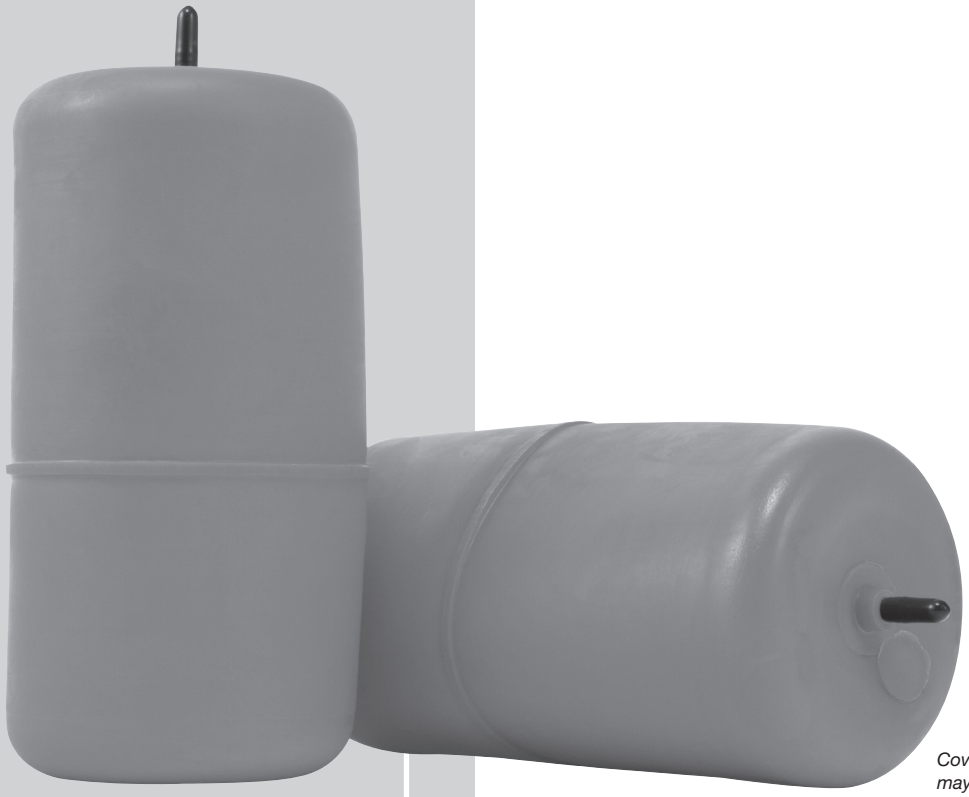

Cover image may not depict actual kit.

INSTALLATION GUIDE

For maximum effectiveness and safety, please read these instructions completely before proceeding with installation.

Failure to read these instructions can result in an incorrect installation.

MN-219 • (031907) • ECR 9350

TABLE OF CONTENTS

Introduction

The purpose of this publication is to assist with the installation and maintenance of the Air Lift 1000 air spring kit.

It is important to read and understand the entire installation guide before beginning installation or performing any maintenance, service or repair. The information here includes a hardware list, tool list, step-by-step installation information and maintenance guidelines.

Air Lift Company reserves the right to make changes and improvements to its products and publications at any time. For the latest version of this manual, contact Air Lift Company at (800) 248-0892 or visit our website at www.airliftcompany.com.

NOTATION EXPLANATION

Hazard notations appear in various locations in this publication. Information which is highlighted by one of these notations must be observed to help minimize risk of personal injury or possible improper installation which may render the vehicle unsafe. Notes are used to help emphasize areas of procedural importance and provide helpful suggestions. The following definitions explain the use of these notations as they appear throughout this guide.

⚠ DANGER INDICATES IMMEDIATE HAZARDS WHICH WILL RESULT IN SEVERE PERSONAL INJURY OR DEATH.

⚠ WARNING INDICATES HAZARDS OR UNSAFE PRACTICES WHICH COULD RESULT IN SEVERE PERSONAL INJURY OR DEATH.

⚠ CAUTION INDICATES HAZARDS OR UNSAFE PRACTICES WHICH COULD RESULT IN DAMAGE TO THE MACHINE OR MINOR PERSONAL INJURY.

NOTE *Indicates a procedure, practice or hint which is important to highlight.*

Installing the Air Lift 1000 System

GETTING STARTED

1. Jack up rear of vehicle or raise on hoist. Support frame with safety stands. Remove lower shock absorber attaching bolts.
2. Mark the upper spring seat and coil spring with a marker so as to index the spring back in the same position upon installation.
3. Lower the axle or raise the body of the vehicle until the suspension has extended far enough to remove the coil spring.

⚠ CAUTION

IT MAY BE NECESSARY TO UNBOLT THE BRAKE LINE HANGERS SO AS NOT TO PULL ON THE HOSE DURING THIS STEP. IT MAY ALSO BE NECESSARY TO UNBOLT THE SWAY BAR TO GAIN ADDITIONAL CLEARANCE TO DROP THE AXLE FAR ENOUGH FOR THE LOWER SPRING SEAT ACCESS. NOTE: MOST SWAY BARS UNBOLT FROM THE AXLE, SOME MAY BE ATTACHED TO THE LOWER CONTROL ARM.

4. A 3/4” access hole must be made for the valve stem. Using the template on the last page, cut out the circle which best fits your model to center punch the lower spring seat for the hose/stem access. Drill a 3/4” hole, or enlarge the existing hole, in the center of the lower spring seat. Option: you can drill the hole out to 1/2” and grind larger as previously suggested. Remove all burrs and sharp edges (Fig. 1).

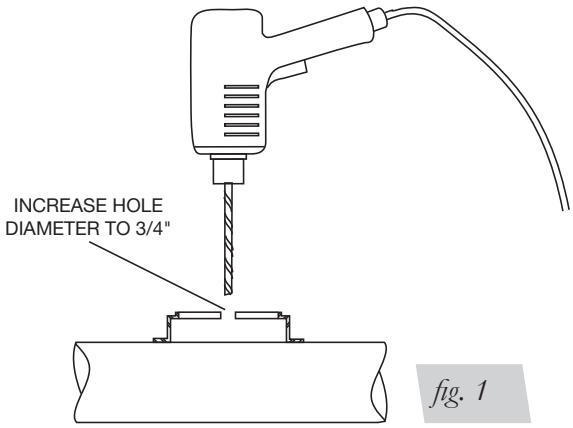

fig. 1

5. LANDCRUISER: using a socket and extension, remove the rubber bump stop from the upper spring seat and discard (Fig. 2).

NOTE

Jeep Liberty, Commander, Grand Cherokee, Wrangler and Dodge Nitro: pull jounce bumper out of cup (Fig. 2).

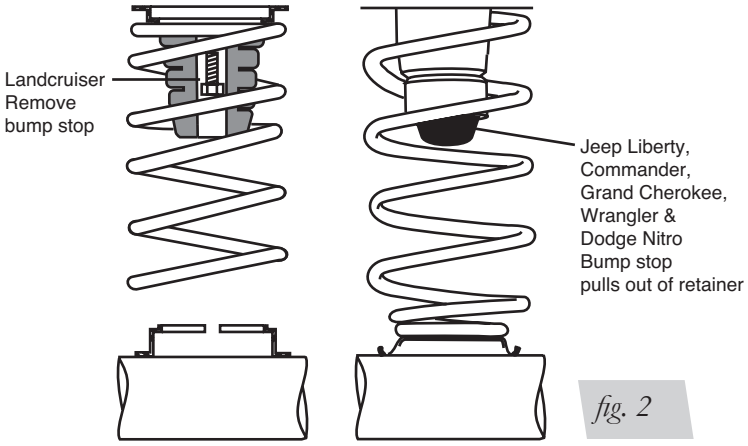

fig. 2

6. Insert air cylinder into coil spring with stem at bottom.

NOTE

2002-2007 Jeep Liberty & Wrangler: Insert spacers at the bottom between the cylinder and the bottom spring seat (Fig. 3). Do not use spacer for Commander, late model Liberty, Dodge Nitro or the Grand Cherokee.

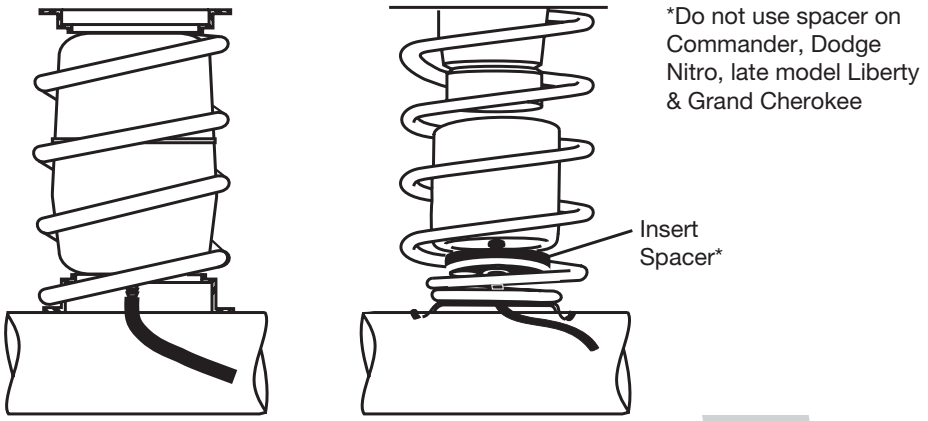

Landcruiser Installation *02-07 Jeep Liberty, Dodge Nitro, Commander & Wrangler Installation*

fig. 3

7. Raise the axle or lower the body to install the coil spring into the spring seats and rotate to proper location marked in step two. Attach the lower shock absorber attaching bolts.
8. Install air line as detailed in the Installing the Air Lines section. A tee air line installation is recommended unless weight in vehicle varies form one side to the other and unequal pressures are needed to level load (or compensate for axle torque transfer in racing application). Dual air lines are used in this case. Proceed with tee air line routing or dual air line routing.
9. Inflate cylinders to 25 PSI (1.7BAR). Test for air leaks by applying a liquid soap and water solution to all valve cores, fittings and connections.
10. Lower the vehicle to the ground. Re-attach all brake lines previously removed and torque all mounting hardware removed per the torque chart supplied (Fig. 4). Recheck air pressure after 24 hours. A 2-4 PSI (0.14-0.3 BAR) loss after initial installation is normal. If pressure has dropped more than 5 PSI (0.3BAR) re-test for leaks with soapy water solution.

Year(s)	Model	Sway Bar (Nm/lb.-ft.)	Shock (Nm/lb.-ft.)
	LandCruiser	18 Nm/13 lb.-ft.	98 Nm/72 lb.-ft.
08 - Current	Liberty	47 Nm/35 lb.-ft.	115 Nm/85 lb.-ft.
2002 - 2007	Liberty	99 Nm/73 lb.-ft.	115 Nm/85 lb.-ft.
	Nitro	47 Nm/35 lb.-ft.	115 Nm/85 lb.-ft.
	Commander	42 Nm/31 lb.-ft.	115 Nm/85 lb.-ft.
	Grand Cherokee	54 Nm/40 lb.-ft.	115 Nm/85 lb.-ft.
	Wrangler	90 Nm/66 lb.-ft.	76 Nm/56 lb.-ft.

fig. 4

Installing the Air Lines

A single-path air line installation is recommended for vehicles that typically have even weight distribution (Fig. 5). If weight in the vehicle varies from side to side and unequal pressures are needed to level the load, use a dual-path installation. For dual-path air line installations, eliminate the tee fitting and route separate air lines for both air springs (Fig. 6).

Single-path Air Line Routing

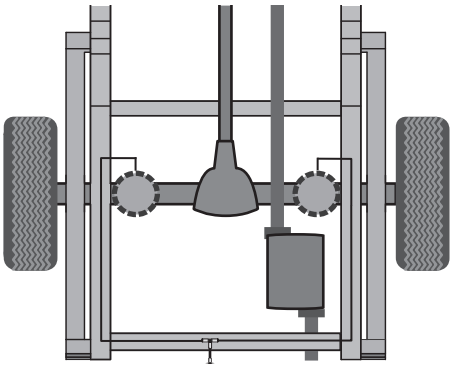

fig. 5

Dual-path Air Line Routing

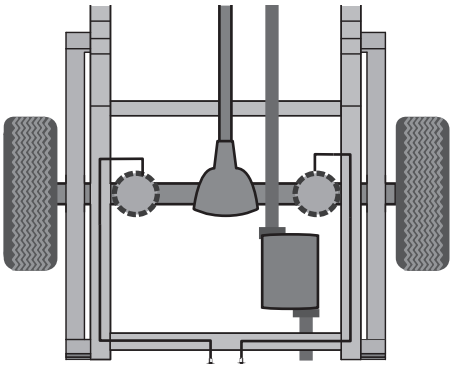

fig. 6

⚠ CAUTION TO PREVENT THE AIR LINE FROM MELTING, MAINTAIN AT LEAST 6” (152MM) FROM THE EXHAUST SYSTEM TO THE AIR LINE.

1. If installing a single-path air line, choose a location for the tee fitting. Determine and cut adequate length of air line to reach to the tee from left and right side air springs.

⚠ CAUTION LEAVE SUFFICIENT AIR LINE SLACK TO PREVENT ANY STRAIN ON THE FITTING DURING AXLE MOTIONS.

2. Use this procedure (Fig. 7) for all air line connections:
   a. Slide the air line clamp onto the air line.
   b. Push the air line and air line clamp over the barbed stem so that the air line covers all the barbs.
   c. Compress the ears on the air line clamp with pliers and slide it forward to fully cover the barbs.
3. Select a location for the Schrader valve, ensuring that the valve will be protected and accessible with an air hose (Fig. 8). Determine and cut adequate length of air line to reach from the tee to the Schrader valve or from the air springs to the valve if using a dual-path installation.

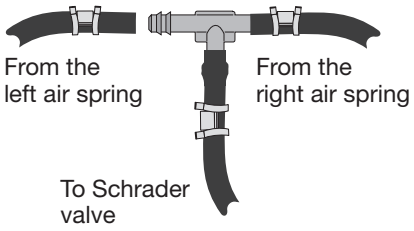

fig. 7

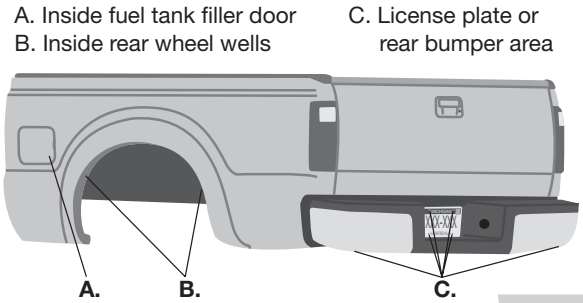

fig. 8

4. Drill a 5/16” (8mm) hole for the Schrader valve and mount as shown (Fig. 9). Install the air line on the Schrader valve first. The rubber washer serves as an outside weather seal.

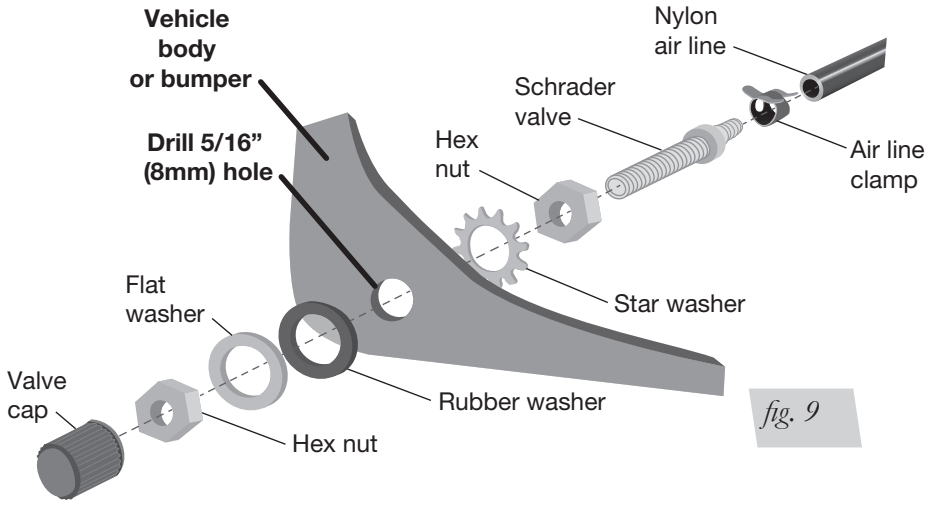

fig. 9

CAUTION DO NOT INFLATE THE AIR SPRINGS BEFORE READING THE MAINTENANCE AND USE GUIDELINES IN THIS INSTALLATION GUIDE AS WELL AS THE USER GUIDE INCLUDED WITH THIS KIT.

Before Operating

INSTALLATION CHECKLIST

- ❑ Clearance test — Inflate the air springs to 30 PSI (2.07BAR) and ensure there is at least 1/2" (13mm) clearance around each air spring, away from anything that might rub against them. Be sure to check the tire, brake drum, frame, shock absorbers and brake cables.
- ❑ Leak test before road test — Inflate the air springs to 30 PSI (2.07BAR), check all connections for leaks with a soapy water solution. All leaks must be eliminated before the vehicle is road tested.
- ❑ Heat test — Be sure there is sufficient clearance from any heat sources — at least 6" (152mm) for air springs and air lines. If a heat shield was included in the kit, install it. If there is no heat shield, but one is required, call (800) 248-0892.
- ❑ Fastener test — Recheck all bolts for proper torque. Re-torque after 100 miles (161km).
- ❑ Road test — The vehicle should be road tested after the preceding tests. Inflate the air springs to 25 PSI/1.72BAR (30 PSI/2.07BAR if the vehicle is loaded). Drive the vehicle 10 miles (16km) and recheck for clearance, loose fasteners and air leaks.
- ❑ Operating instructions — If professionally installed, the installer should review the *Maintenance and Use Guidelines* section with the owner. Be sure to provide the owner with all of the paperwork which came with the kit.

Maintenance and Use Guidelines

1. Check the air pressure weekly.
2. Always maintain normal ride height. Never inflate beyond 35 PSI (2.4BAR).
3. If the system develops an air leak, use a soapy water solution to check all air line connections and the inflation valve core before deflating and removing the air spring.

Minimum Pressure	Maximum Air Pressure
5 PSI (.34BAR)	35 PSI (2.4BAR)

⚠ CAUTION FOR SAFETY AND TO PREVENT POSSIBLE DAMAGE TO THE VEHICLE, DO NOT EXCEED MAXIMUM GROSS VEHICLE WEIGHT RATING (GVWR) OR PAYLOAD RATING, AS INDICATED BY THE VEHICLE MANUFACTURER.

⚠ CAUTION ALTHOUGH THE AIR SPRINGS ARE RATED AT A MAXIMUM INFLATION PRESSURE OF 35 PSI (2.4BAR), THE AIR PRESSURE ACTUALLY NEEDED IS DEPENDENT ON LOAD AND GROSS VEHICLE WEIGHT RATING.

Limited Warranty and Return Policy

Air Lift Company provides a limited lifetime warranty to the original purchaser of its load support products, that the products will be free from defects in workmanship and materials when used on cars and trucks as specified by Air Lift Company and under normal operating conditions, subject to the requirements and exclusions set forth in the full Limited Warranty and Return Policy that is available at **www.airliftcompany.com/warranty**.

For additional warranty information contact Air Lift Company customer service.

Template for use with Air Lift 1000

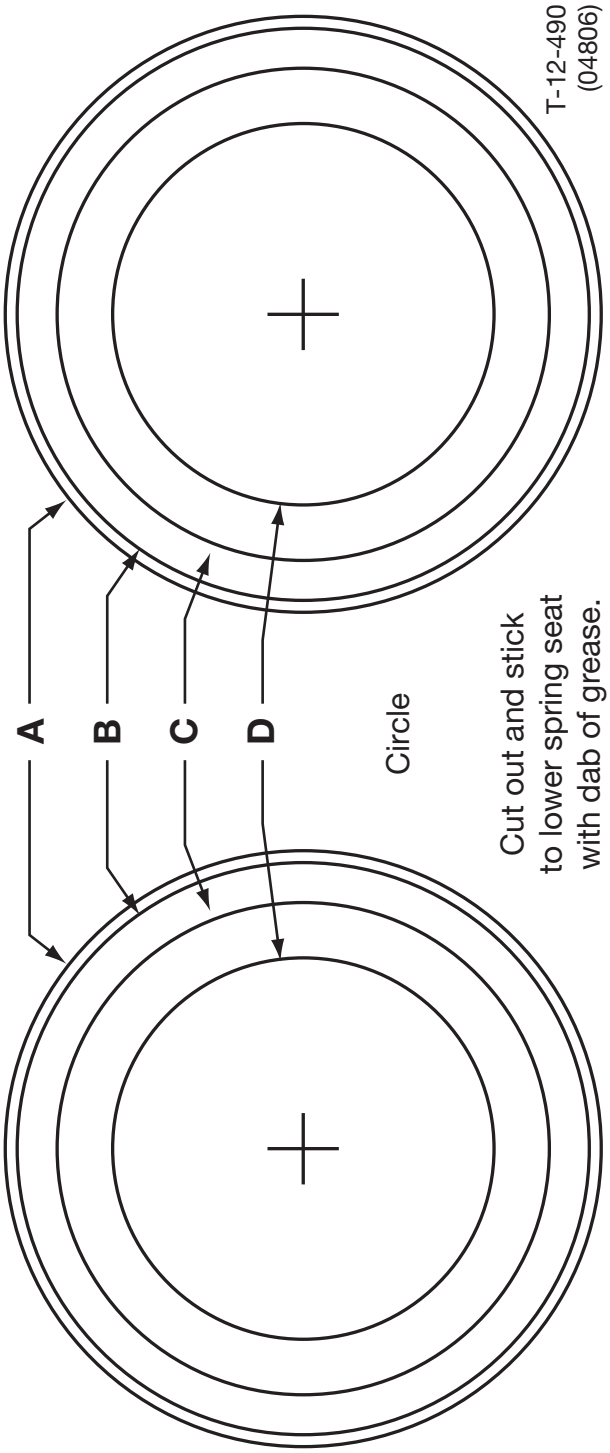

Need Help?

Contact our customer service department by calling (800) 248-0892, Monday through Friday. For calls from outside the USA or Canada, our local number is (517) 322-2144.

Thank you for purchasing Air Lift products — the professional installer's choice!

Air Lift Company • 2727 Snow Road • Lansing, MI 48917 or PO Box 80167 • Lansing, MI 48908-0167
Toll Free (800) 248-0892 • Local (517) 322-2144 • Fax (517) 322-0240 • www.airliftcompany.com

Printed in the USA
JJC-0319

MADE IN USA
WITH GLOBAL
COMPONENTS